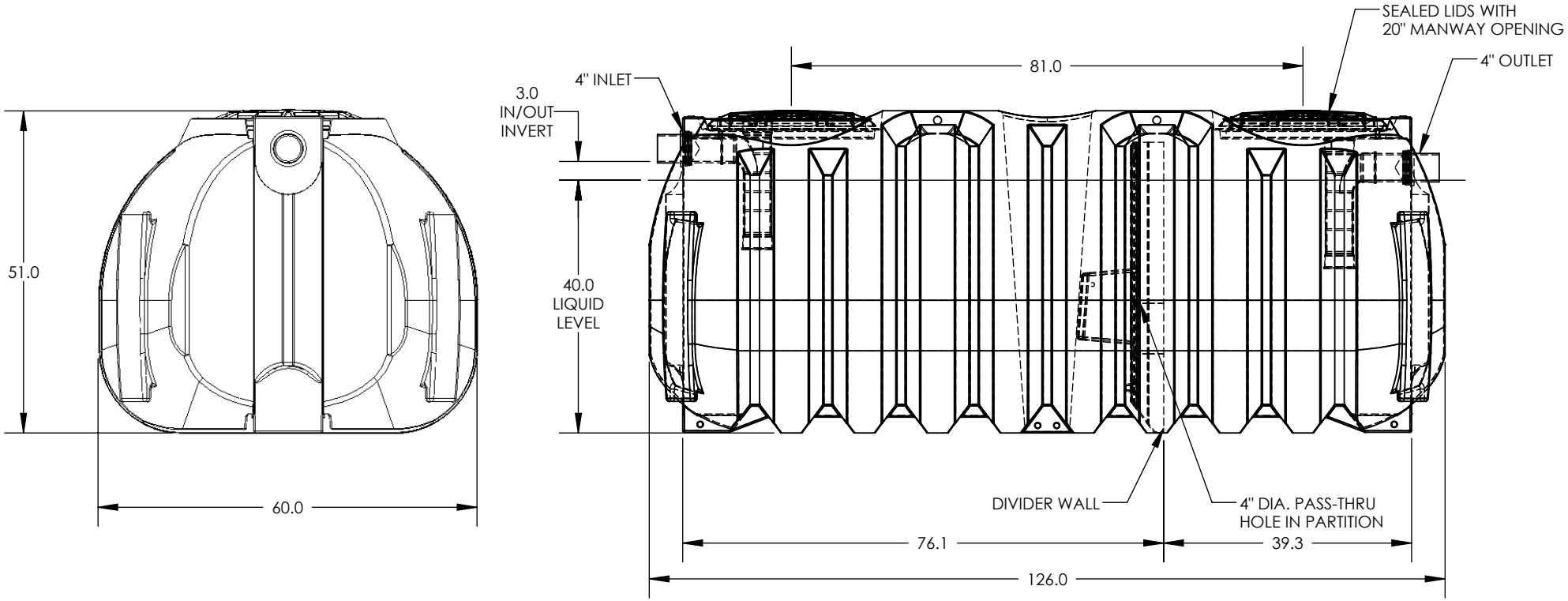

NOTE:
SNYDER INDUSTRIES NEXGEN D2 SEPTIC TANKS ARE PROVIDED WITH THE INLET AND OUTLET HOLES DRILLED. THE INLET AND OUTLET TEES AND EPDM GASKETS ARE ALSO PROVIDED BUT NOT INSTALLED. TANK IS SHOWN WITH PLUMBING INSTALLED FOR DIMENSIONAL PURPOSES ONLY.

ALL DIMENSIONS ARE IN INCHES, NOMINAL, & SUBJECT TO CHANGE WITHOUT NOTICE.
ALL DIMENSIONS ON ROTATIONAL MOLDED PARTS ARE SUBJECT TO A ± 3% TOLERANCE.

DO NOT SCALE	DRAWN BY		TITLE:	REVISION
STATUS: **Released**	IGG	SNYDER INDUSTRIES, INC.	**ASM TK 1000 D2 SEPTIC DBL-COMP**	**A**
				SHEET 1 OF 1
PART NO. **43517**			ENG. ID. **D004456**	

© SNYDER INDUSTRIES INC., 2015

ALL DIMENSIONS, DESIGNS, AND INFORMATION ON THIS PRINT MUST BE CONSIDERED PROPRIETARY TO SNYDER INDUSTRIES, INC. AND MAY NOT BE USED, COPIED, OR DISTRIBUTED WITHOUT WRITTEN PERMISSION OF AN OFFICER (OR HIS AGENT) OF THE FIRM.

(402) 467-5221
www.snydernet.com